Fristam PUMPS®

Engineered For Lasting Performance™

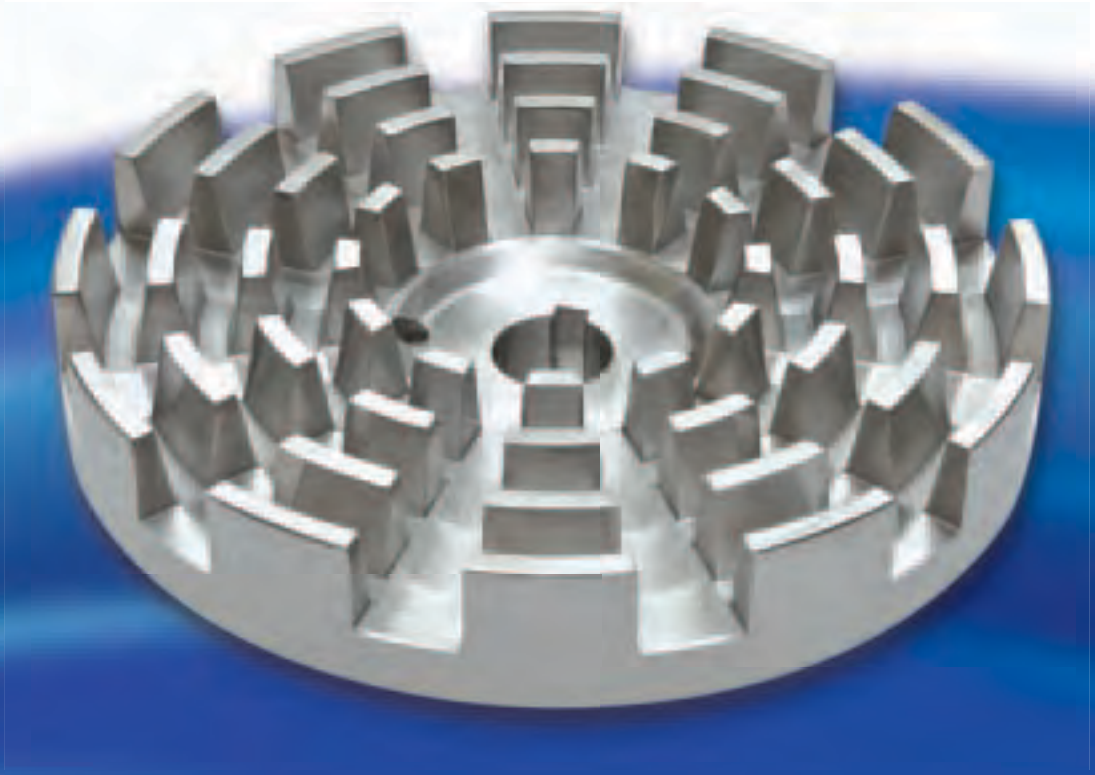

Mixing & Blending

Fristam Powder Mixer

FS Shear Blender

omd oliver m. dean, inc.
800-648-3326
www.omdean.com

POWDER MIXER

Engineered For Lasting Performance™

www.fristam.com/mix

Better Blending in Less Time

Stop wasting your valuable time and money on outdated, oversized, or underperforming mixing systems.

The Fristam Powder Mixer provides quick, high-performance blending of wet and dry ingredients into a fluid stream.

- Dramatically reduces process times
- Produces consistent batches
- Devours lumps, clumps, and fisheyes
- Cleans in place
- Eliminates ladder climbing
- Is fully customizable: sizes, configurations, and options

"It used to take us 8 hours. Now, it's only 15 minutes with the Powder Mixer."

– Midwest cheese processor

Consistency Begins on the Inside

The Fristam Powder Mixer's proven pump and blender system is efficient and easy to use. The Fristam FZX is unparalleled as a self-priming pump, easily pulling liquids and solids together for the Fristam FS Shear Blender to blend, often on the first pass.

POWDER MIXER

Engineered For Lasting Performance™

www.fristam.com/mix

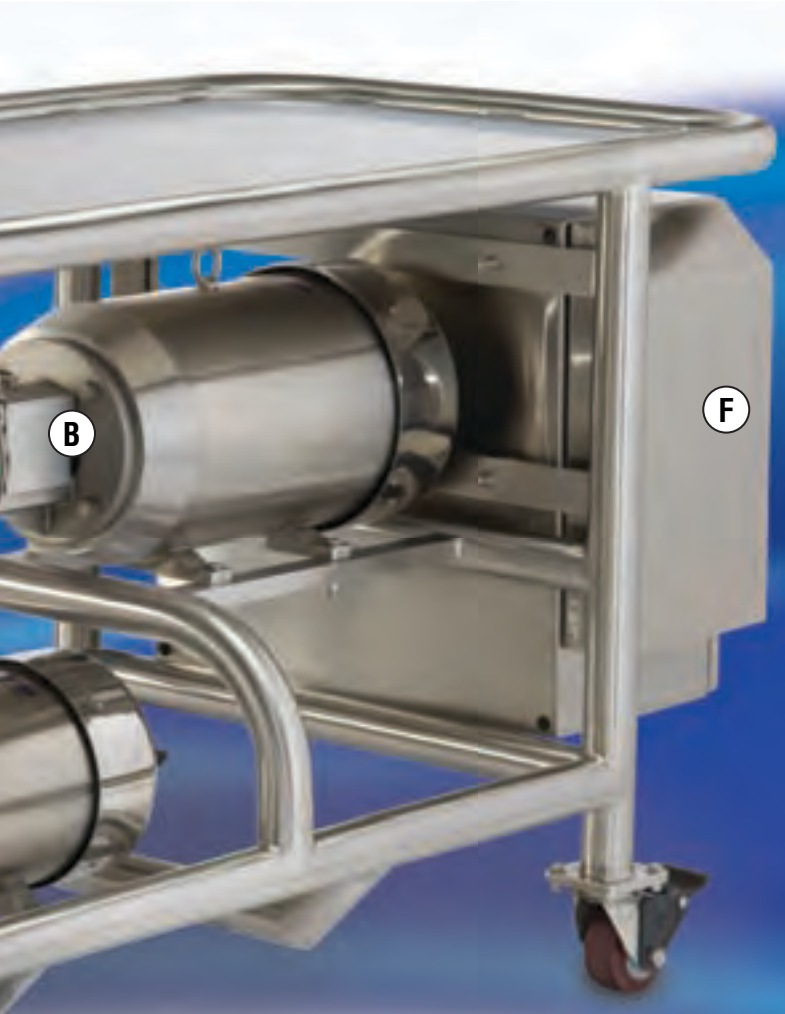

How It Works

1. The FZX pump draws the base fluid out of the batch tank and transfers it through a short pipe to the Powder Mixer.
2. When the FZX pump is throttled at the suction side by the liquid control valve, a strong vacuum is generated in the “Y” pipe below the funnel.
3. This vacuum draws powder or liquid directly into the fluid flow. As this mixture passes through the FZX pump, mixing begins to take place.
4. The FZX then pumps this premix through the FS Shear Blender where any remaining lumps are eliminated by high turbulent action.
5. The product mixture is pumped from the Powder Mixer back to a batch tank or to another process tank.

Components

- (A) Fristam FZX Liquid Ring Pump (page 17)
- (B) Fristam FS Shear Blender (page 14)
- (C) Powder Induction Funnel
- (D) Powder Control Valve
- (E) Liquid Control Valve
- (F) Control Panel

Powder Mixer Applications

Personal Care
Shampoo & Conditioner
Toothpaste
Lotion & Cream
Mouthwash

Food
Olive Oil/Water Emulsion
Salsa & Hot Sauce
Ketchup & Mustard
Vegetable Oil Refining
Mayonnaise
Salad Dressing
Pizza Sauce

Dairy
Chocolate Milk
Cottage Cheese Dressing
Ice Cream Mix
Yogurt
Sour Cream
Eggnog
Pudding

POWDER MIXER

Engineered For Lasting Performance™

Thickeners
Pectin
Carbopol®
Carrageenan
Starches
Gelatin
Xanthan Gum

Non-Sanitary
Biodiesel
Paintballs
Fertilizer

Ingredients
Aloe Vera
Honey
Aspartame
Non-Fat Dry Milk (NFDM)
Beeswax
Calcium Carbonate
Salt
Sodium Citrate
Chocolate Powder
Sugar
Citric Acid
Vanilla
Crystal Sugar
Vegetable Oil
Egg Powder
Whey Protein Concentrate

Beverage
Orange Juice
Mineral Water
Green Tea
Vegetable Juice

Bio-Pharmaceutical
Tablet Coatings
Cough Syrup
Topical Ointments
Lotions
Vitamin Drinks

Fristam Pumps offers the most comprehensive testing, documentation, and certification packages in the industry.

Better Than Batch Mixers

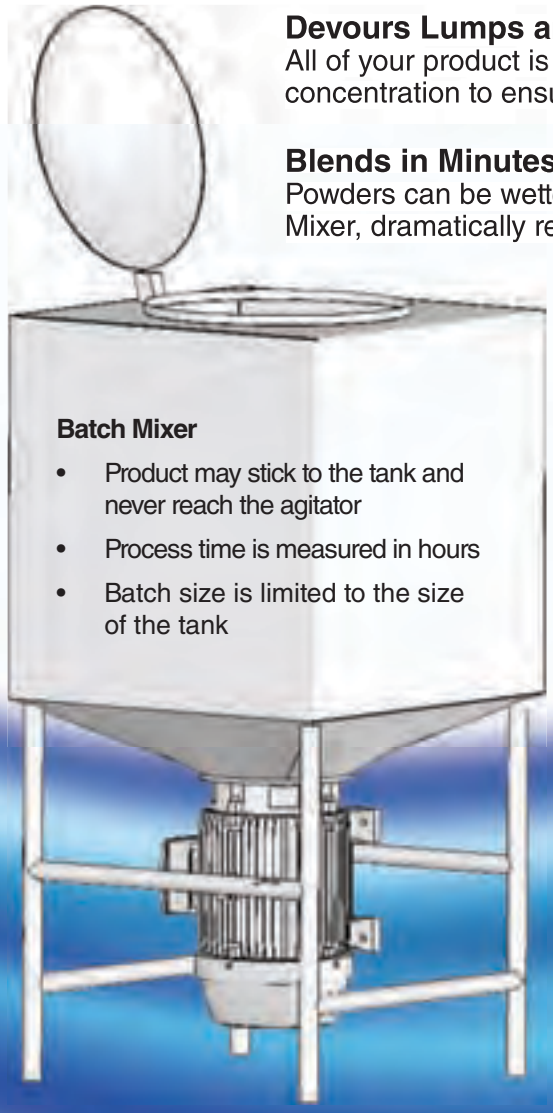

Batch Mixer

- Product may stick to the tank and never reach the agitator
- Process time is measured in hours
- Batch size is limited to the size of the tank

Devours Lumps and Clumps
All of your product is forced through the FS Shear Blender teeth at a controlled concentration to ensure a complete and consistent mix.

Blends in Minutes
Powders can be wetted and dispersed on the first pass through the Powder Mixer, dramatically reducing process times.

Processes Larger Batches
As the Fristam Powder Mixer is an inline system, the batch size is infinite.

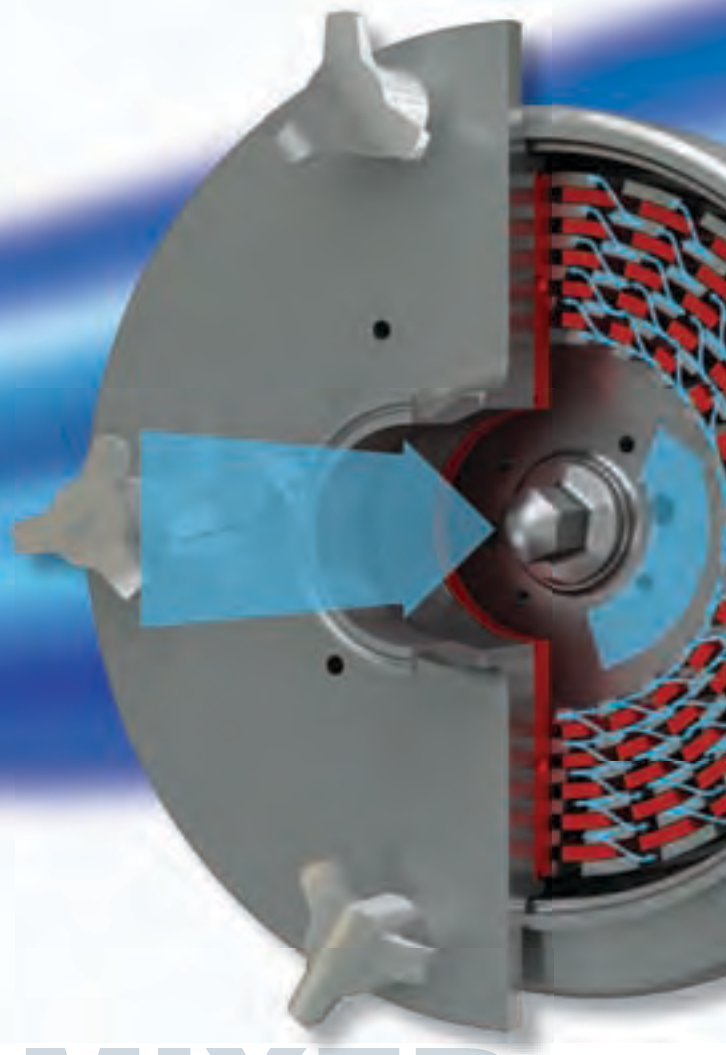

POWDER MIXER

Engineered For Lasting Performance™

www.fristam.com/mix

Better Than Funnel/Pump Combinations

High Intensity Blending
The FS Shear Blender uses high tip speeds and close clearances to create a highly turbulent mixing zone.

Consistent Consistency
The FZX creates constant suction for even flow to ensure a uniform product, even as viscosity increases.

Funnel/Pump

- Relying on gravity/vortex/Venturi effect to force powder into liquid can lead to plugging as viscosity increases.
- Pumping through a screen will not thoroughly blend your product.
- Belts and bearings can cause maintenance headaches.

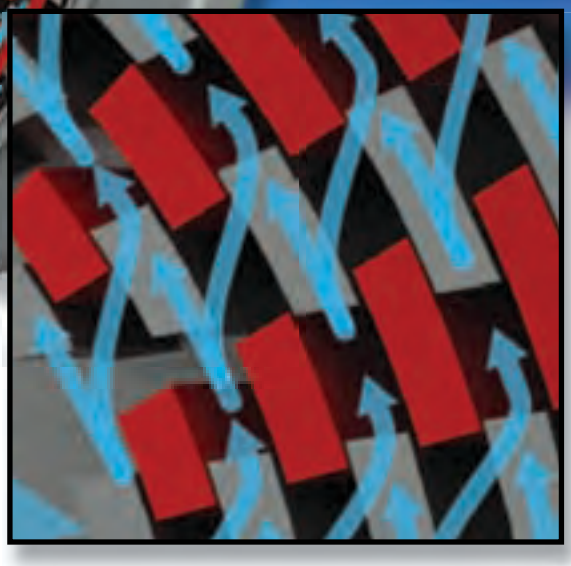

Rotor Teeth
Stator Teeth
Product Flow

Better Blending
The FS Shear Blender uses an intermeshed rotor/stator system to disperse particles into liquid. The rotating teeth pass within 0.5 mm of the stationary teeth at high speeds, causing a tremendous amount of turbulence. As centrifugal force pushes the product towards the outlet, the intensity of this turbulence ensures that all product must be thoroughly blended to exit the FS.

Components and Options

The Fristam Powder Mixer is manufactured specifically for each order.

Its dimensions and configuration are fully customizable.

POWDER MIXER

Engineered For Lasting Performance™

www.fristam.com/mix

Fully Customizable

ss Steel Table,
faces Finish, Wheels
ss Steel, Adjustable Legs

Bench-Tested, Removable Control Panel

Options: VFD, NEMA 4X, Remote Mounting, UL Listing, PLC, Valve Control, Vibration Control

Pumps and Motors

Options: Double Seals on Pumps, Stainless Steel Motors (shown)

Other Options

Pump Casing Drains, Table Drain Valve, Drum unloading Port, Suction Wand Port, Second Funnel for Additional Liquid or Solid

Powder Mixer	Induction Rate (lbs/min)		Liquid Flow	FZX Pump		FS Shear Blender	
Model	Powders (Sugar, NFDM, etc.)	Thickeners (pectin, gums)	GPM	Model	HP	Model	HP
10-52	50–105	2–4	30–65	2100	5–7.5	3522	10–15
15-53	105–175	2–6	65–110	2150	7.5–10	3532	20–25
20-53	160–220	4–9	100–140	2200	10–15	3532	20–25
25-54	200–285	9–15	120–175	2250	15–20	3542	30–50
25-55	240–325	11–23	150–200	2250	15–20	3552	50–60
40-55	325–600	15–40	200-375	2400	50–60	3552	60–75

Ergonomic and Safe

Floor-Level Operation
No dangerous ladder climbing. No falling or dropping equipment from a mezzanine.

Waist-Height Funnel Top
No bending to pour.

Portable
Smaller models are portable, with locking wheels. Easily move the Powder Mixer to different processes each day.

POWDER MIXER

Engineered For Lasting Performance™

www.fristam.com/mix

No Risk Trial

Fristam offers on-site trials with your product. For only a nominal fee, Fristam will put our Powder Mixer to work for you, so you can see the amazing results for yourself.

- Fully operational Powder Mixer
- Factory-trained technician on-site
- Expert process guidance

"It proved so successful, we kept it. The chemist and I wouldn't let it leave. We were able to achieve results that we weren't able to achieve with the old system, and in only 30 minutes mixing time."

– E. Martinez, Coats Aloe International

FS Shear Blender

Fristam's FS Series Shear Blender for inline mixing, blends products quickly and consistently. Compared to conventional methods, the Shear Blender shortens processing times significantly.

The Shear Blender's rotor-stator design eliminates unblended product and prevents lumps and masses in product for consistent, repeatable results.

- Improves product texture
- Reduces processing time
- Economical to operate and maintain
- Low maintenance design for continuous duty and CIP

4 heads

8 models (low/high speed)

Viscosities in excess of 30,000 cps

Tip speeds up to 44 m/s

FS BLENDER

Engineered For Lasting Performance™

www.fristam.com/mix

Rotor/Stator Options for Diverse Applications

- Blend
- Emulsify
- Disperse
- Dissolve
- Texturize
- Reduce particle size

Easy Maintenance

Fristam's FS Series sanitary blender, designed for easy maintenance and less parts inventory, retains the standard established with our high performance centrifugal and positive displacement pumps. Designed with a front pullout seal, the FS allows production personnel to service the pump in place.

Additionally, no special tools are required to service FS Blenders. They have fewer parts, so processors have less maintenance parts to stock. Two seal sizes fit the entire FS line.

Fully CIP'able

The design of the FS meets the most stringent sanitary standards. Its fully balanced internal seal performs at virtually any pressure.

FSI Shear Pump

Fristam's FSI Series Shear Pump is an impeller-style version of the Fristam FS Series Shear Blender.

Pump and Blender in One

For applications requiring both pumping and mixing, Fristam's FSI has an integrated impeller that provides high flow rates while still mixing your product.

The FSI can also replace a pump and blender combination in many other processes, including finish/ supplemental mixing.

4 heads

8 models (low/high speed)

Viscosities in excess of 30,000 cps

Tip speeds up to 44 m/s

Applications

- **Reconstituting powder (e.g. milk)**
- **Smoothing finished product (e.g. yogurt)**
- **Neutralizing and washing biodiesel**

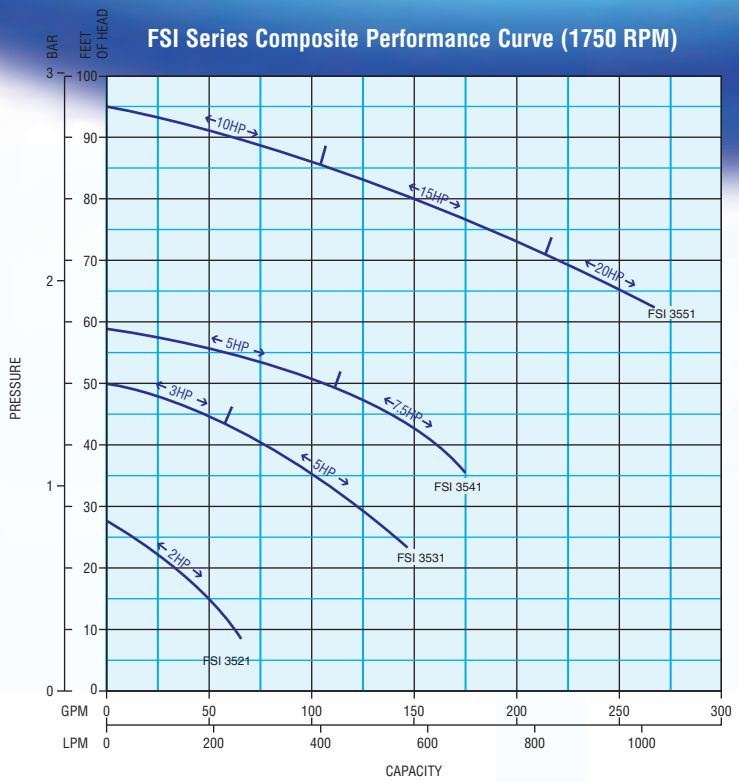

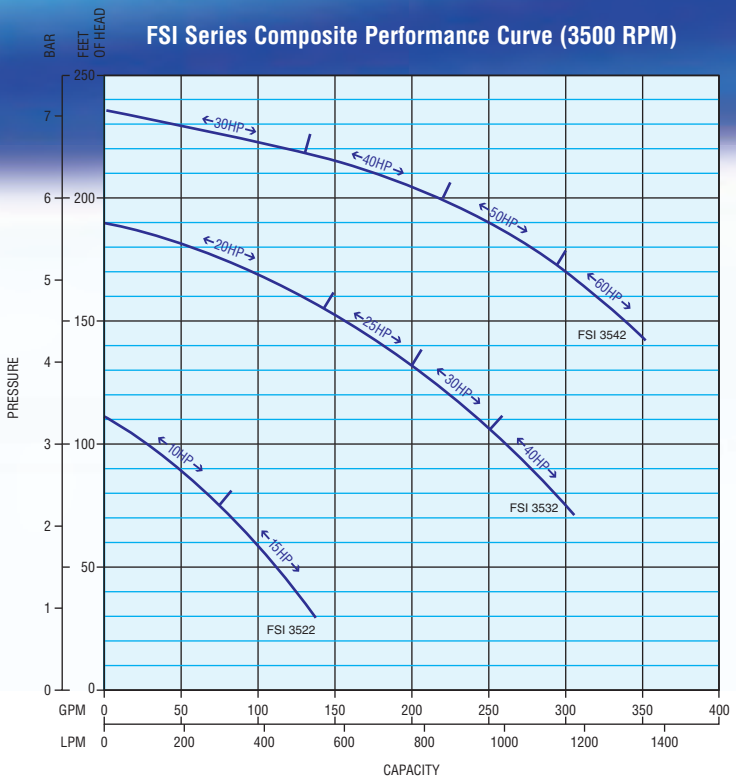

FZX Liquid Ring Pump

Self-priming for Complete Evacuation

This sanitary liquid ring pump provides new capabilities for handling products with entrained air. By using a specially designed impeller and housing, the FZX maintains its prime when other pumps become air bound. This feature makes the FZX more efficient for complete evacuation of tanks and lines during normal process or CIP.

5 pump heads

5 models (low speeds)

Viscosities in excess of 5,000 cps

Applications

- **CIP return**
- **Pumping aerated products**
- **Complete emptying of tanks (tanker unloading)**
- **Lifting products from drums and sumps**
- **Texturizing sour cream (replacing homogenizer valves)**
- **Pumping shear sensitive products such as: cream, liquid eggs, yeast, and sour cream**

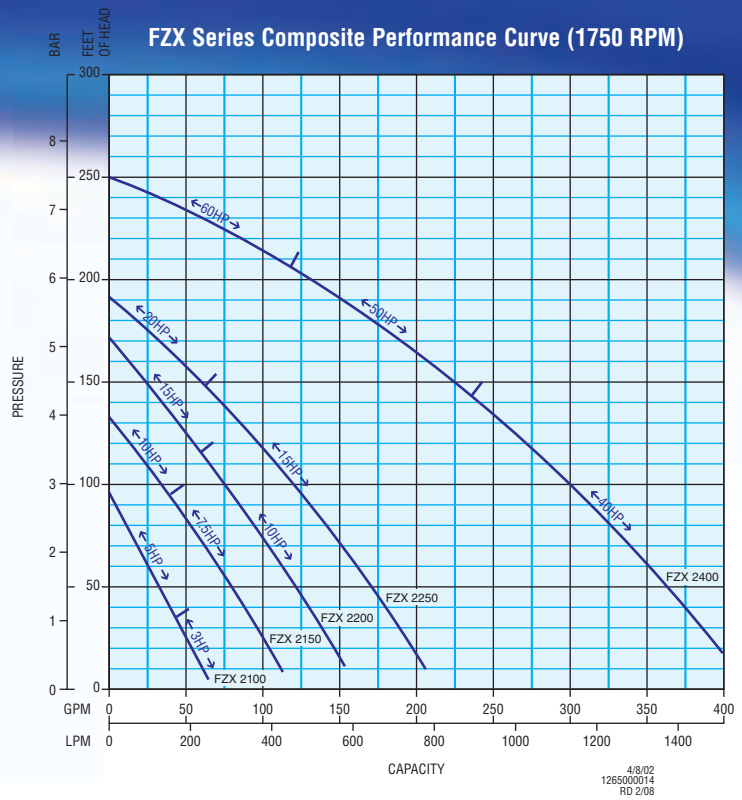

FS Shear Blender Dimensional Drawing

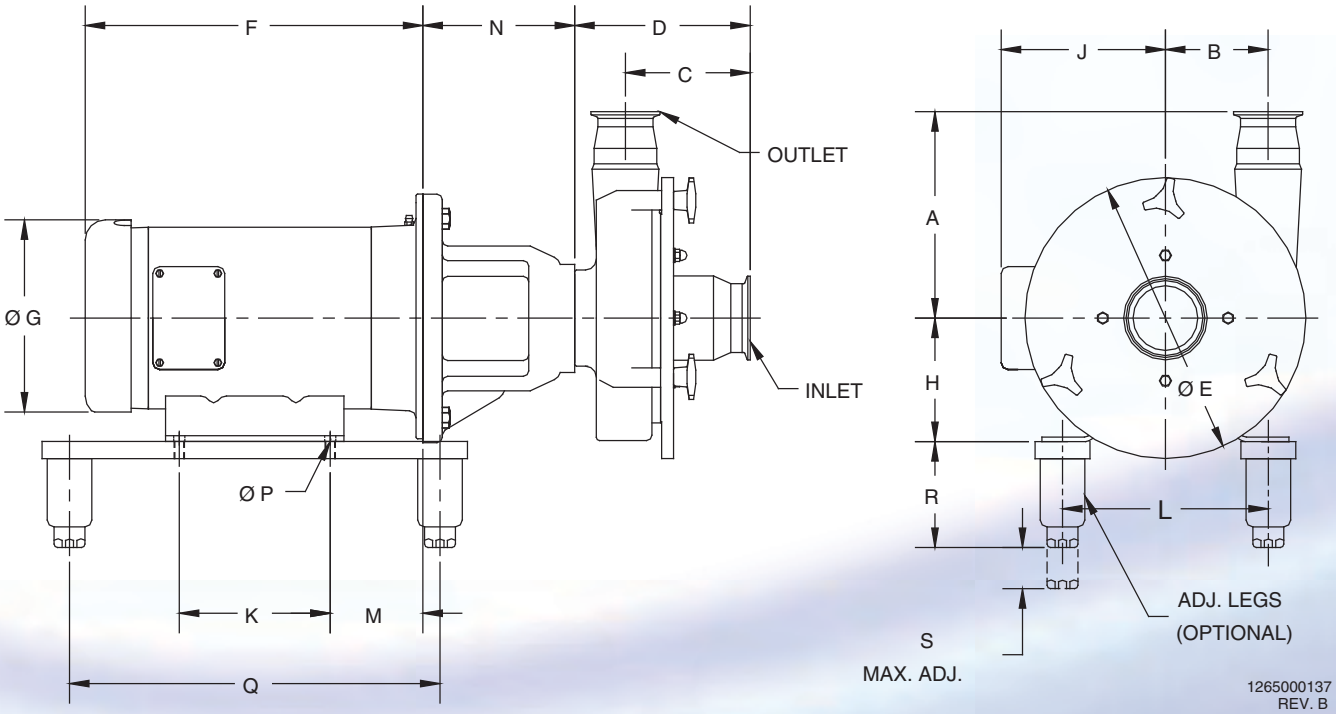

PUMP MODEL	INLET	OUTLET	DIMENSIONS IN MILLIMETERS (INCHES)				
			A	B	C	D	ØE
FS 3521 / 3522	2.5"	2"	190 (7.48")	80 (3.15")	118 (4.64")	162 (6.38")	230 (9.06")
FS 3531 / 3532	2.5"	2"	191 (7.52")	95 (3.74")	115.5 (4.55")	162 (6.38")	260 (10.24")
FS 3541 / 3542	3"	2.5"	211 (8.31")	115 (4.53")	118 (4.64")	162 (6.38")	290 (11.42")
FS 3551 / 3552	3"	2.5"	231 (9.09")	140 (5.51")	119 (4.68")	168 (6.61")	350 (13.78")

MOTOR HP		MOTOR	DIMENSIONS IN MILLIMETERS (INCHES)									
1750 RPM	3500 RPM	FRAME	F	ØG	H	J	K	L	M	N	ØP	Q
1 HP	1.5 HP	143TC	281 (11.06")	183 (7.19")	89 (3.50")	133 (5.22")	102 (4.00")	140 (5.50")	70 (2.75")	120 (4.72")	8.7 (11/32")	343 (13.50")
1.5 HP		145TC	281 (11.06")	183 (7.19")	89 (3.50")	133 (5.22")	102 (4.00")	140 (5.50")	70 (2.75")	120 (4.72")	8.7 (11/32")	343 (13.50")
2 HP	2 HP	145TC	281 (11.06")	183 (7.19")	89 (3.50")	133 (5.22")	102 (4.00")	140 (5.50")	70 (2.75")	120 (4.72")	8.7 (11/32")	343 (13.50")
	3 HP	182TC	313 (12.31")	183 (7.19")	114 (4.50")	132 (5.21")	140 (5.50")	191 (7.50")	89 (3.50")	169 (6.65")	10.3 (13/32")	343 (13.50")
3 HP		182TC	348 (13.69")	183 (7.19")	114 (4.50")	132 (5.21")	140 (5.50")	191 (7.50")	89 (3.50")	169 (6.65")	10.3 (13/32")	343 (13.50")
	5 HP	184TC	347 (13.68")	216 (8.50")	114 (4.50")	152 (5.97")	140 (5.50")	191 (7.50")	89 (3.50")	169 (6.65")	10.3 (13/32")	343 (13.50")
5 HP		184TC	386 (15.18")	216 (8.50")	114 (4.50")	152 (5.97")	140 (5.50")	191 (7.50")	89 (3.50")	169 (6.65")	10.3 (13/32")	343 (13.50")
	7.5 HP	184TC	386 (15.18")	216 (8.50")	114 (4.50")	152 (5.97")	140 (5.50")	191 (7.50")	89 (3.50")	169 (6.65")	10.3 (13/32")	343 (13.50")
7.5 HP		213TC	388 (15.27")	263 (10.34")	133 (5.25")	189 (7.46")	140 (5.50")	216 (8.50")	108 (4.25")	169 (6.65")	10.3 (13/32")	343 (13.50")
10 HP	10 HP	215TC	388 (15.27")	263 (10.34")	133 (5.25")	189 (7.46")	140 (5.50")	216 (8.50")	108 (4.25")	169 (6.65")	10.3 (13/32")	343 (13.50")
	15 HP	215TC	436 (17.15")	263 (10.34")	133 (5.25")	189 (7.46")	140 (5.50")	216 (8.50")	108 (4.25")	169 (6.65")	10.3 (13/32")	343 (13.50")
15 HP		254TC	447 (17.59")	263 (10.34")	159 (6.25")	225 (8.88")	210 (8.25")	254 (10.00")	121 (4.75")	169 (6.65")	13.5 (17/32")	343 (13.50")
	20 HP	256TC	491 (19.34")	263 (10.34")	159 (6.25")	225 (8.88")	254 (10.00")	254 (10.00")	121 (4.75")	169 (6.65")	13.5 (17/32")	394 (15.50")
20 HP		256TC	499 (19.66")	336 (13.25")	159 (6.25")	239 (9.42")	254 (10.00")	254 (10.00")	121 (4.75")	169 (6.65")	13.5 (17/32")	394 (15.50")
25 HP		284TC	436 (17.15")	263 (10.34")	133 (5.25")	189 (7.46")	140 (5.50")	216 (8.50")	108 (4.25")	179 (7.05")	10.3 (13/32")	343 (13.50")
	25 HP	284TSC	447 (17.59")	263 (10.34")	159 (6.25")	225 (8.88")	210 (8.25")	254 (10.00")	121 (4.75")	179 (7.05")	13.5 (17/32")	343 (13.50")
30 HP		286TC	491 (19.34")	263 (10.34")	159 (6.25")	225 (8.88")	254 (10.00")	254 (10.00")	121 (4.75")	179 (7.05")	13.5 (17/32")	394 (15.50")
	30 HP	286TSC	499 (19.66")	336 (13.25")	159 (6.25")	239 (9.42")	254 (10.00")	254 (10.00")	121 (4.75")	179 (7.05")	13.5 (17/32")	394 (15.50")
	40 HP	324TSC	491 (19.34")	263 (10.34")	159 (6.25")	225 (8.88")	254 (10.00")	254 (10.00")	121 (4.75")	179 (7.05")	13.5 (17/32")	394 (15.50")
	50 HP	326TSC	499 (19.66")	336 (13.25")	159 (6.25")	239 (9.42")	254 (10.00")	254 (10.00")	121 (4.75")	179 (7.05")	13.5 (17/32")	394 (15.50")

1265000135
REV. A

Powder Mixer Dimensional Drawing

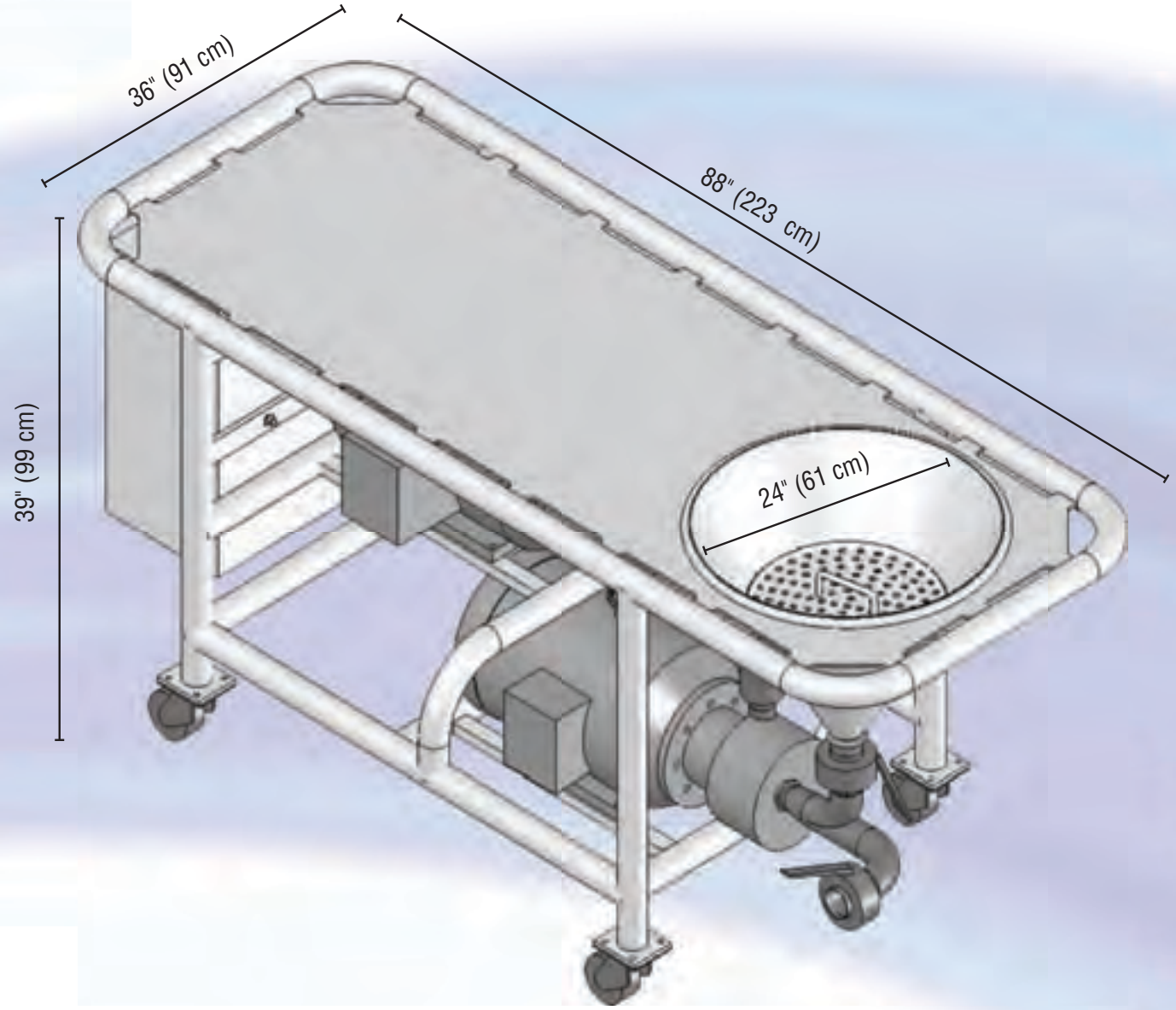

Centrifugal

Positive Displacement

Mixing

Fristam PUMPS®

Engineered For Lasting Performance™

www.fristam.com/mix

Fristam Pumps USA
P.O. Box 620065
2410 Parview Road
Middleton, WI 53562-2524

TEL: 1-608-831-5001
1-800-841-5001
FAX: 1-608-831-8467

www.fristam.com
fristam@fristampumps.com

Re-order #1050000124